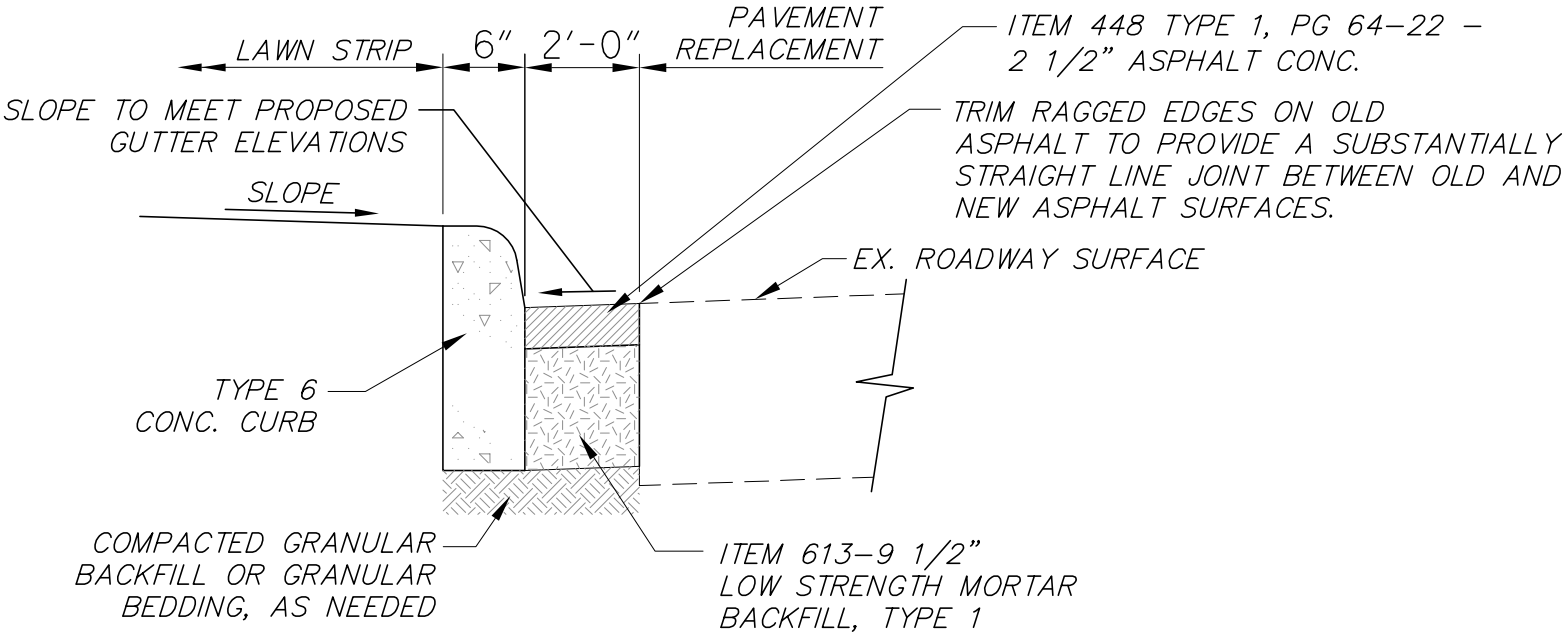

NOT TO SCALE

CITY OF NEW PHILADELPHIA	STANDARD CONSTRUCTION DRAWING NO.
CONCRETE CURB PAVEMENT REPLACEMENT DETAILS	RAY-SD-25A REV. 5-09